RoHS
COMPLIANT

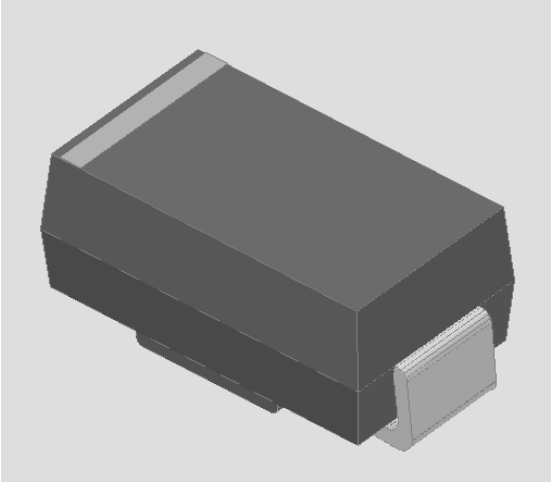

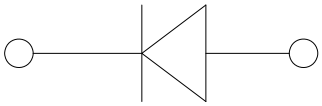

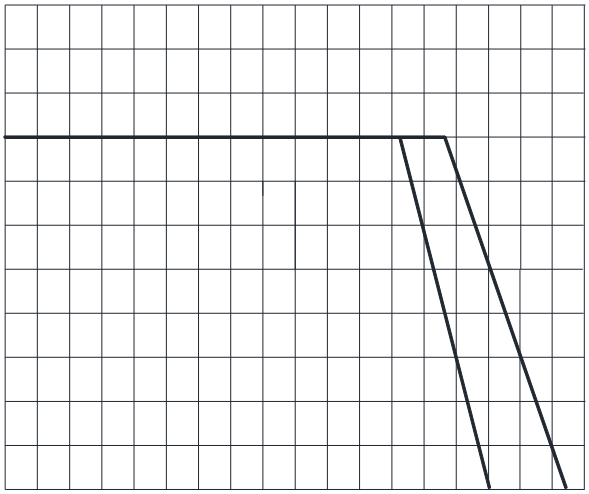

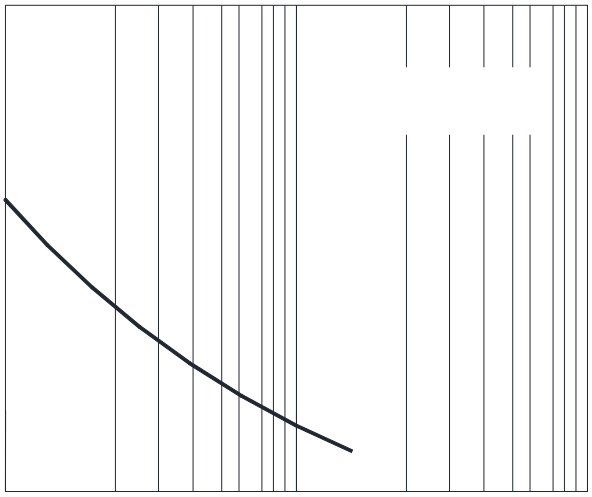

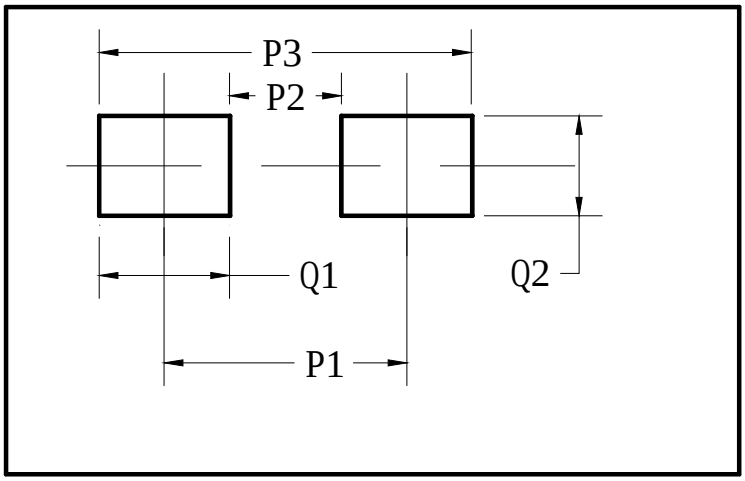
P3
P2
Q1
Q2
P1